Walk in

891020

Eckmontage / Corner montage

A

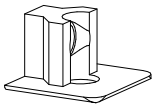

820915

B

854516 4,5x16

C

880003 3 mm

D

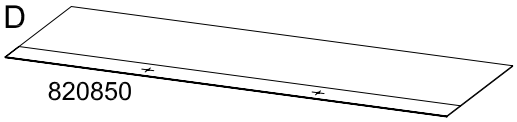

820850

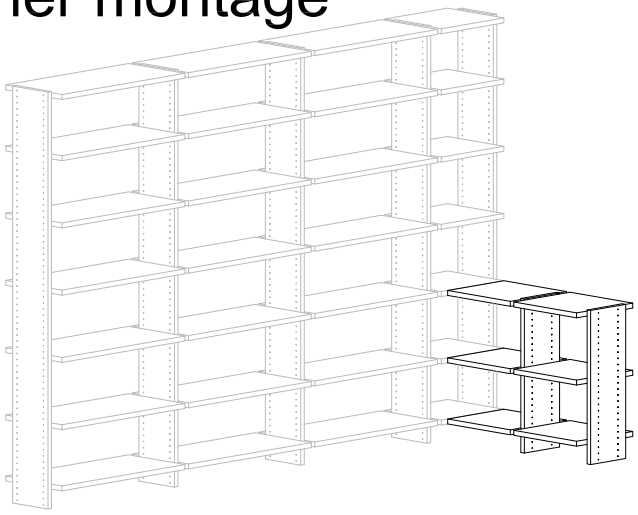

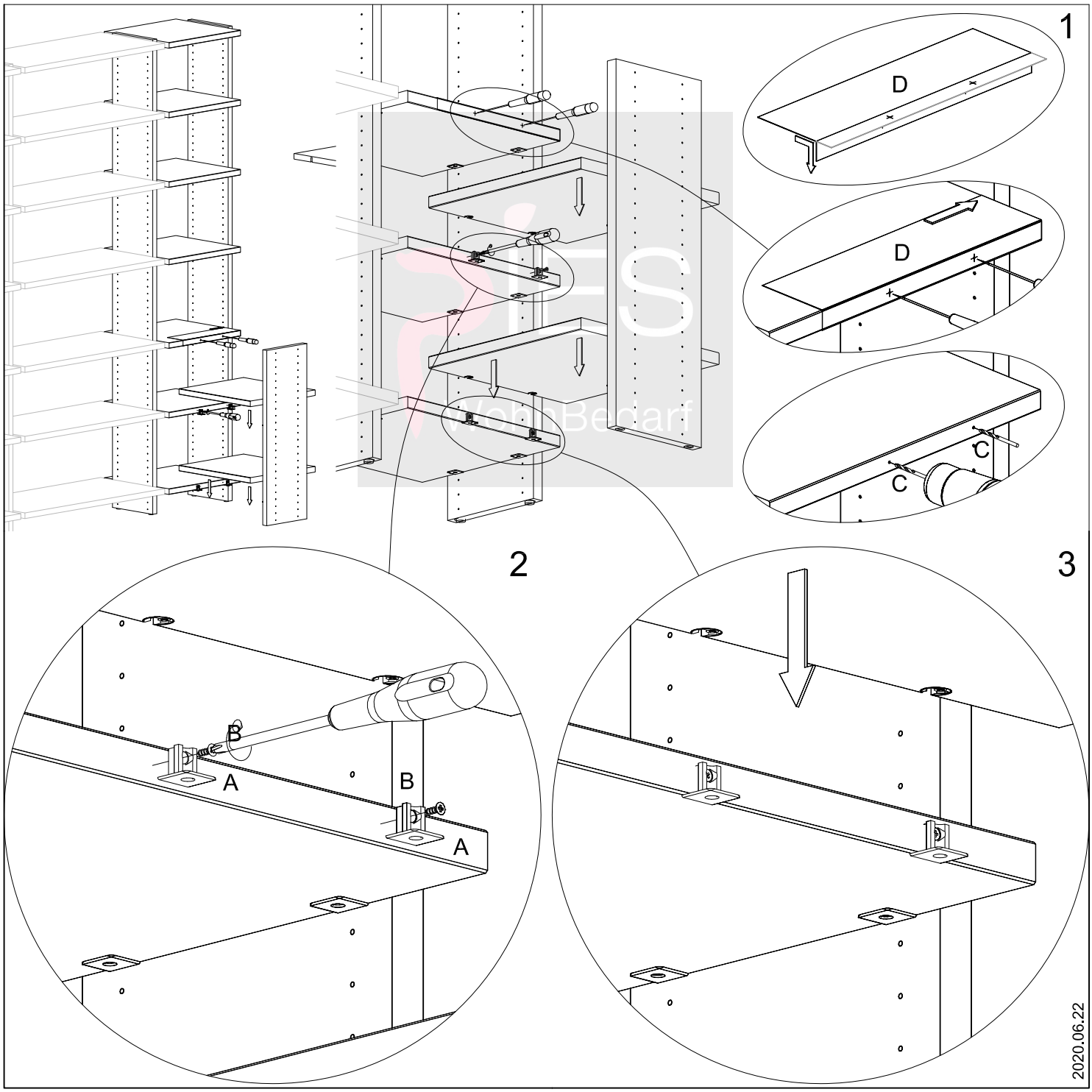

2020.06.22