SARA NACHTTISCH 2170

RT		x 1
MB		x 4
NJ		x 4
CT		x 25
DC	Ø4x16	x 4
MI		x 4
EM	M4x25	x 1
OK		x 1

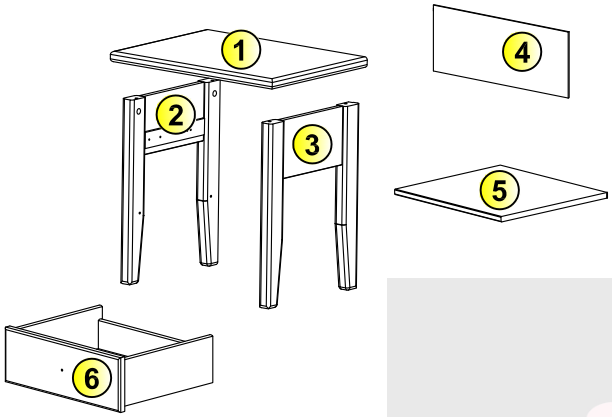

1

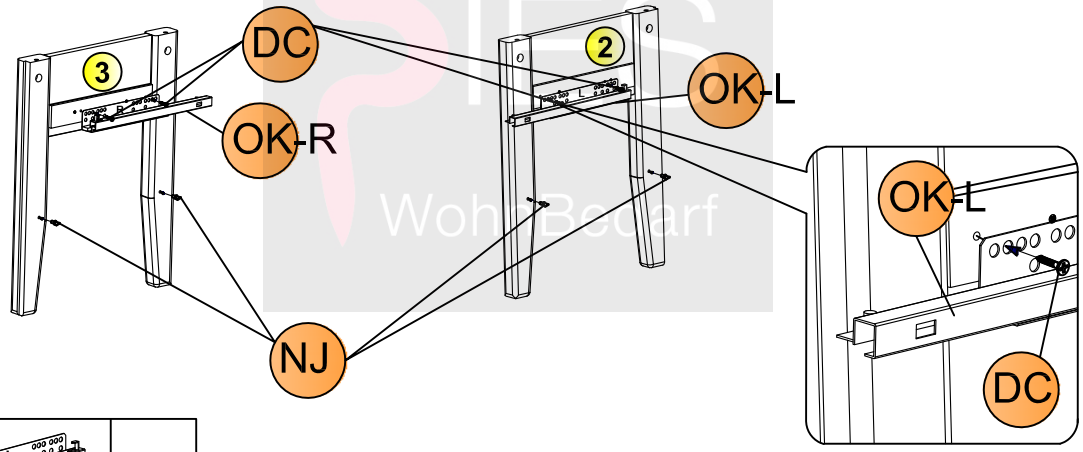

OK		x 1
NJ		x 4
DC	Ø4x16	x 4

2

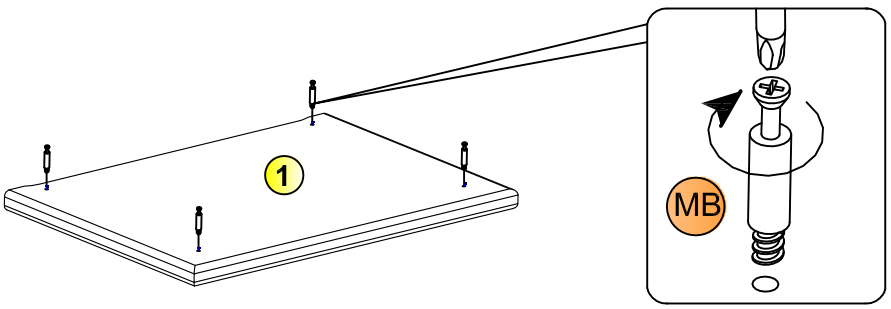

MB		x 4

3

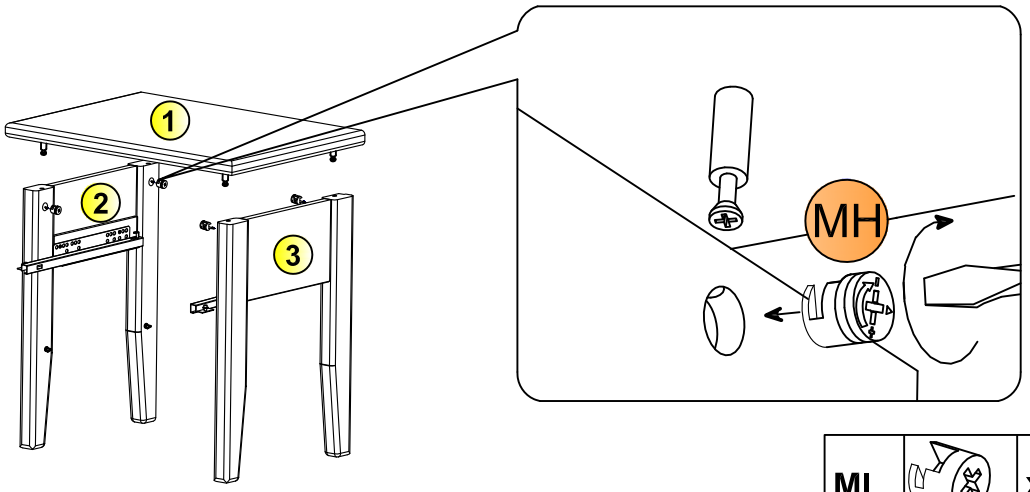

MI		x 4

4

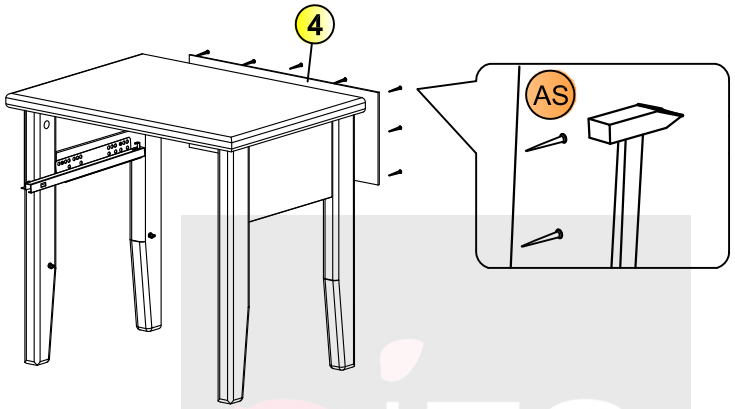

CT		x 25

5

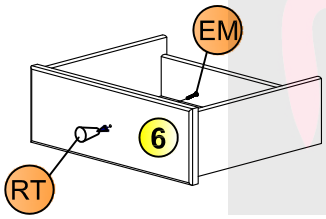

EM	M4x25	x 1	RT	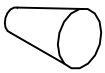	x 1

6

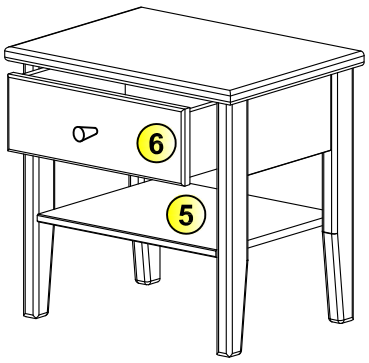

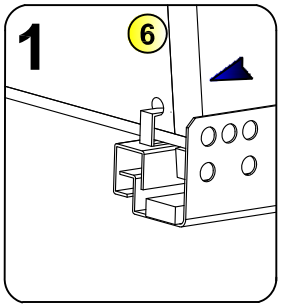

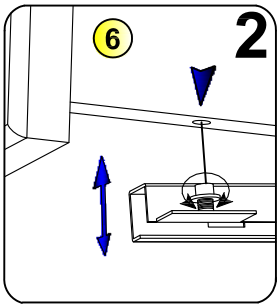

PIES WohnBedarf