Easy Sleep

KOPFTEIL

C93xx/4-x

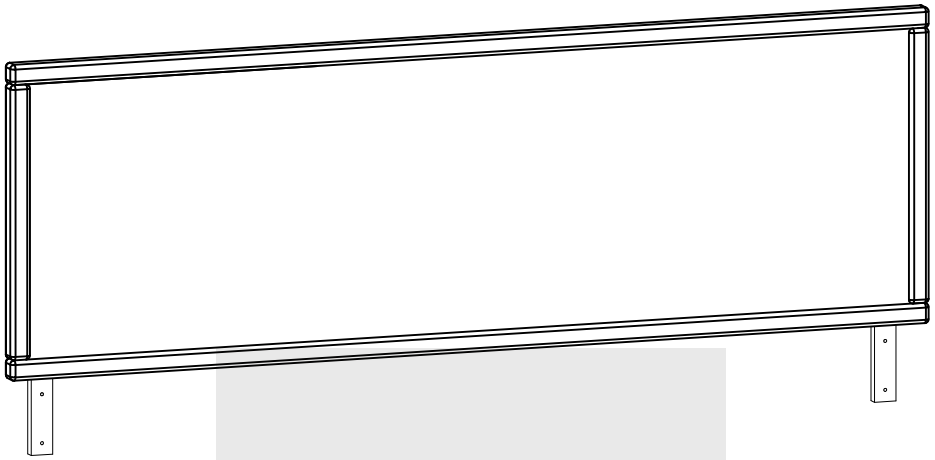

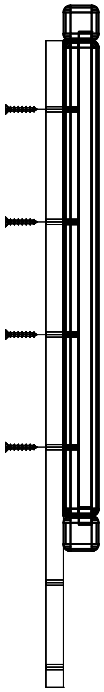

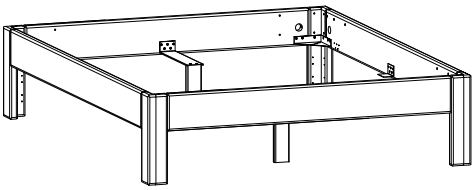

C93

2017.09.20

1

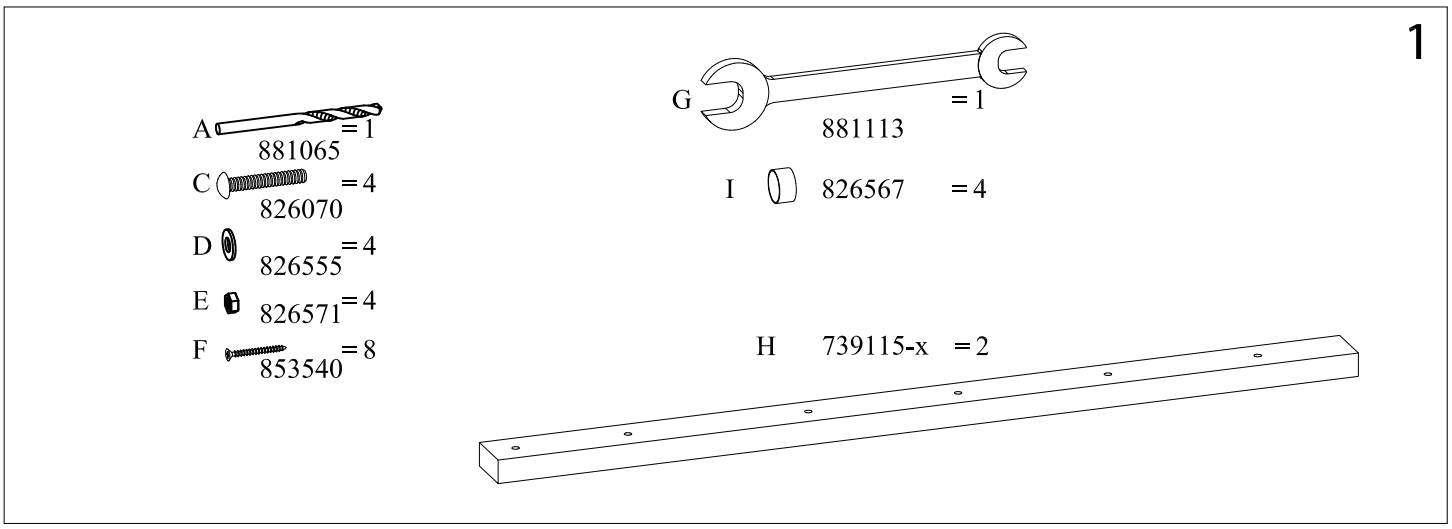
A = 1
881065
C = 4
826070
D = 4
826555
E = 4
826571
F = 8
853540
G = 1
881113
I 826567 = 4
H 739115-x = 2

2

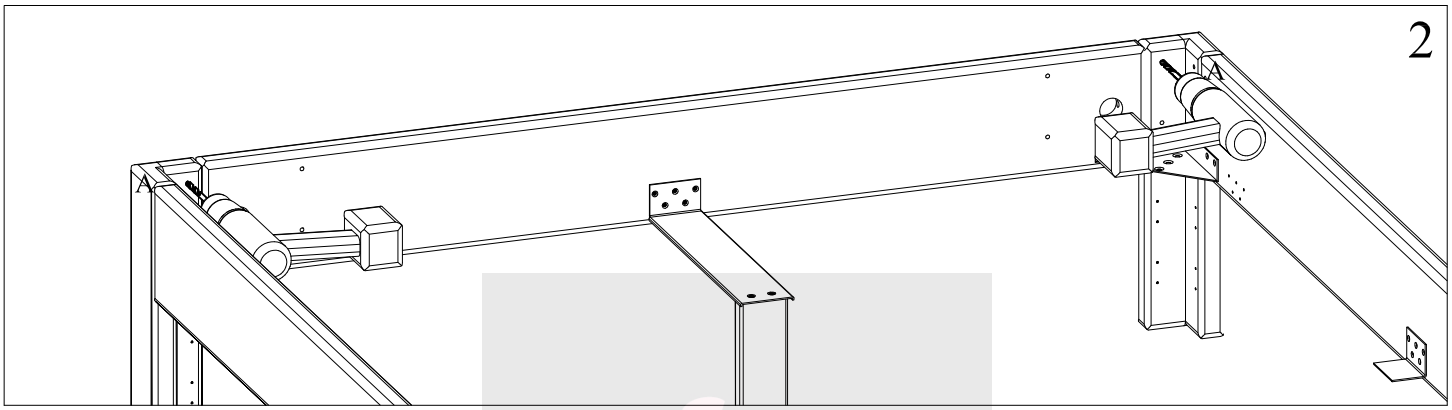
A
A

3

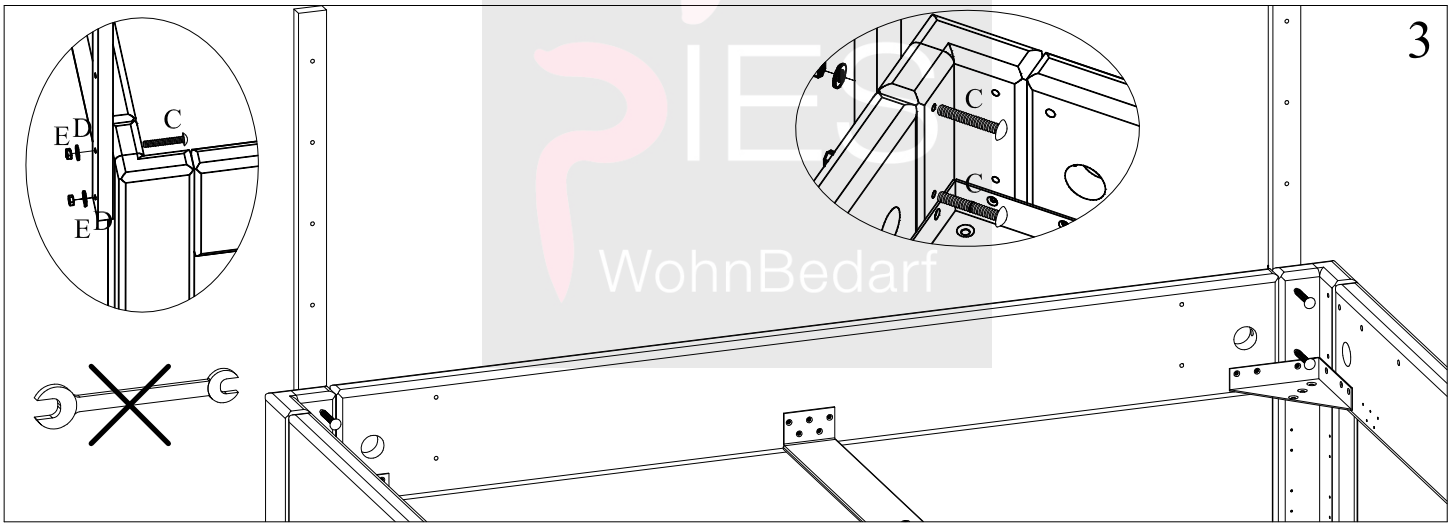
E
D
C
E
D
C
C

4

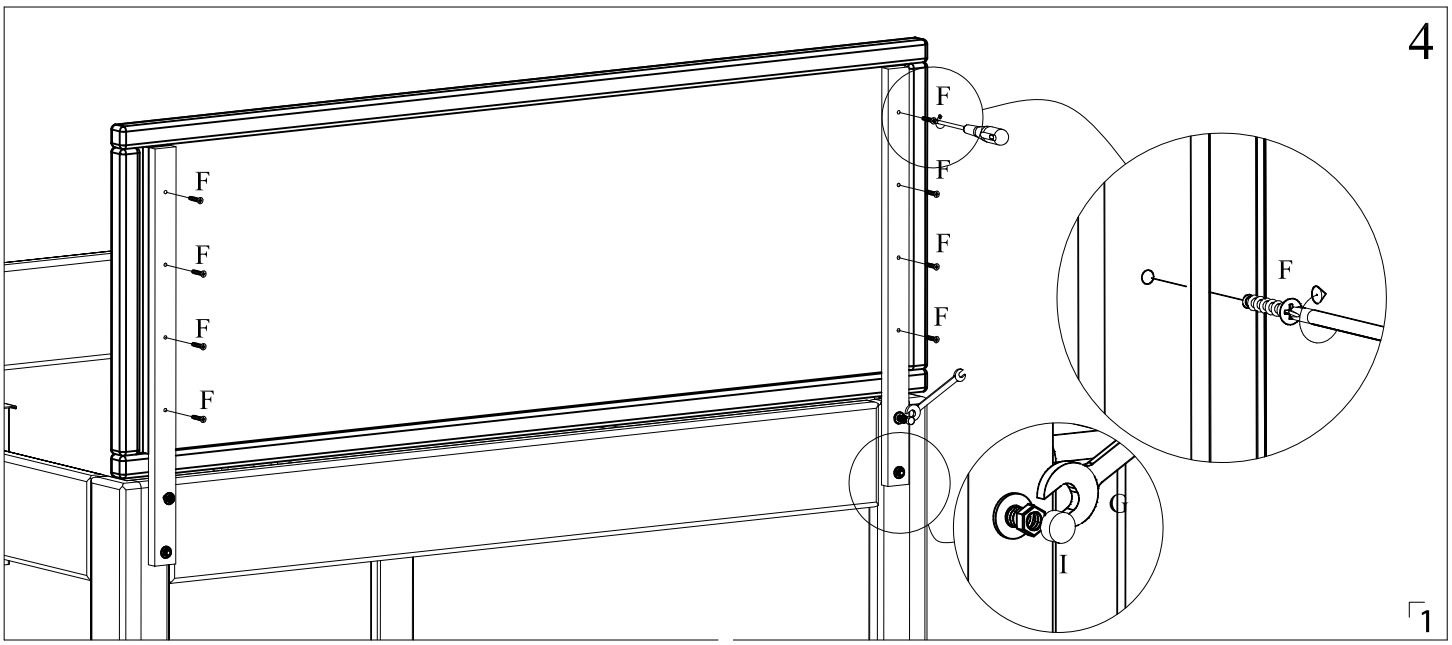
F
F
F
F
F
F
F
F
F
G
I