HASENA
the dream factory

MONTAGEANLEITUNG
NOTICE DE MONTAGE
ASSEMBLY INSTRUCTION
ISTRUZIONE DI MONTAGGIO

SWISS
bed concept

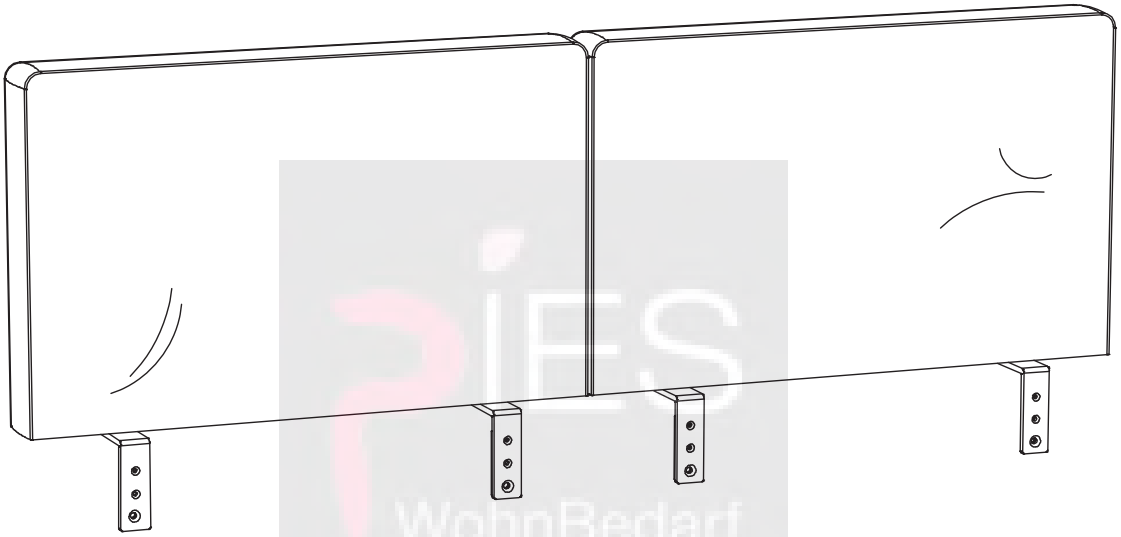

PIES WohnBedarf

Benötigte Werkzeuge – Outils Nécessaires – Tools Required – Attrezzi Necessari

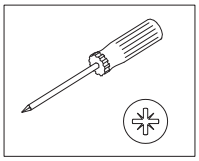

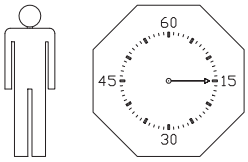

10 10 12

660.00395

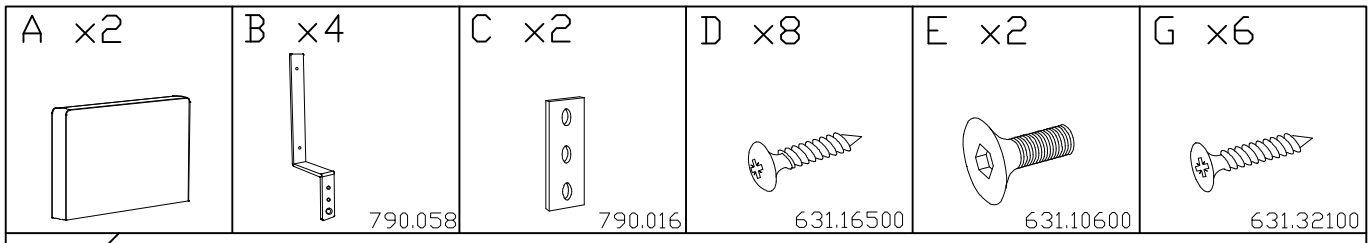
A x2
B x4
790.058
C x2
790.016
D x8
631.16500
E x2
631.10600
G x6
631.32100

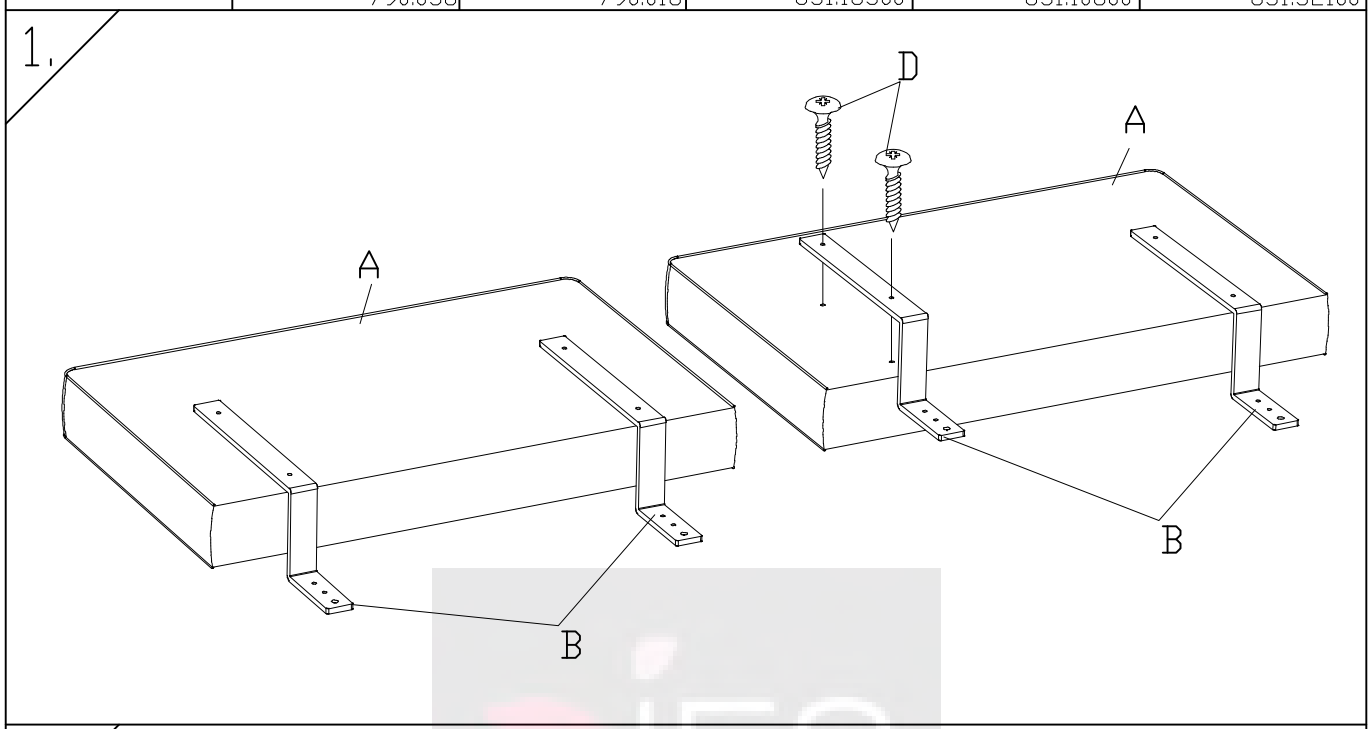
1.
D
A
A
B
B

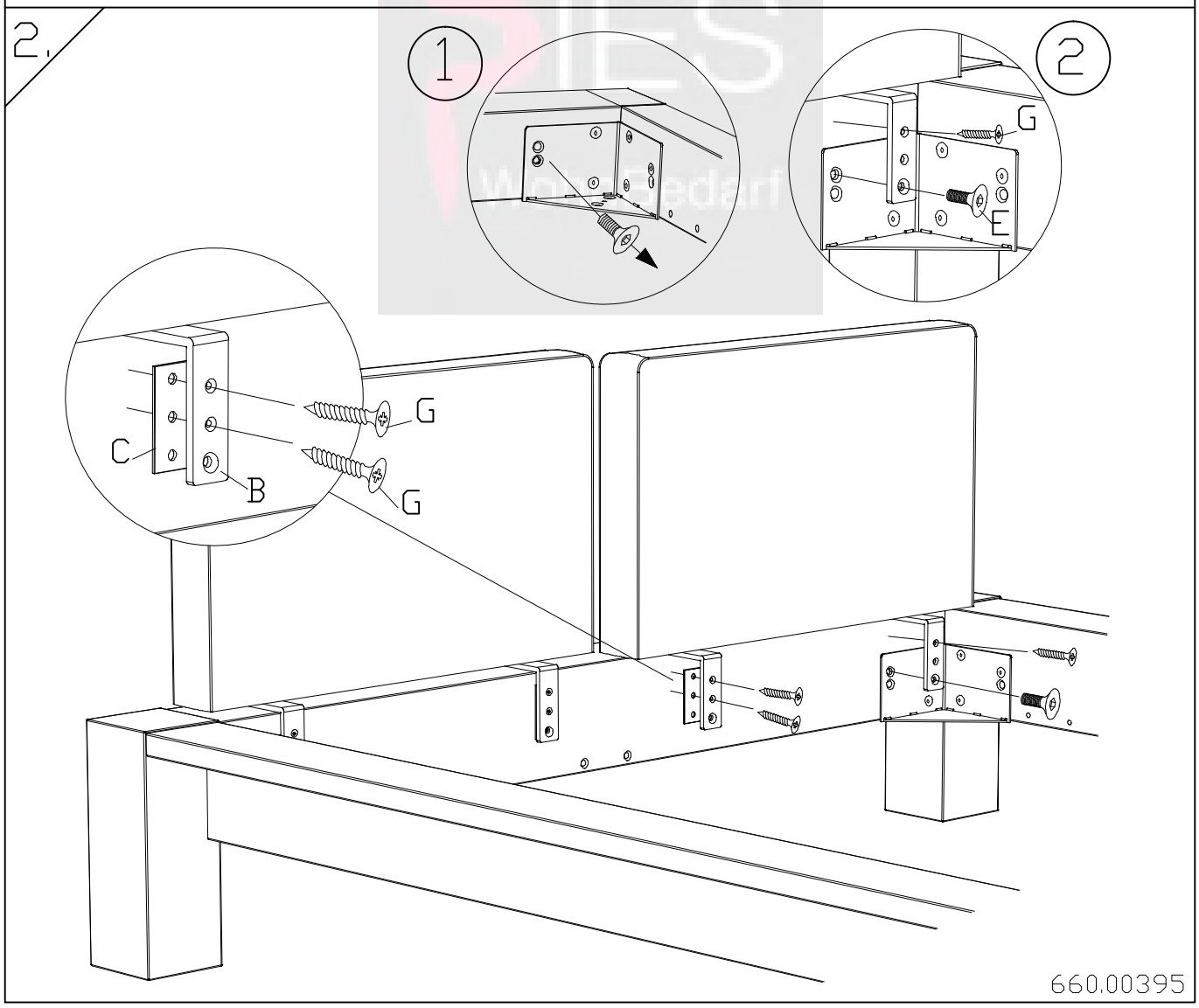
2.
1
2
G
E
G
C
B
G
660.00395